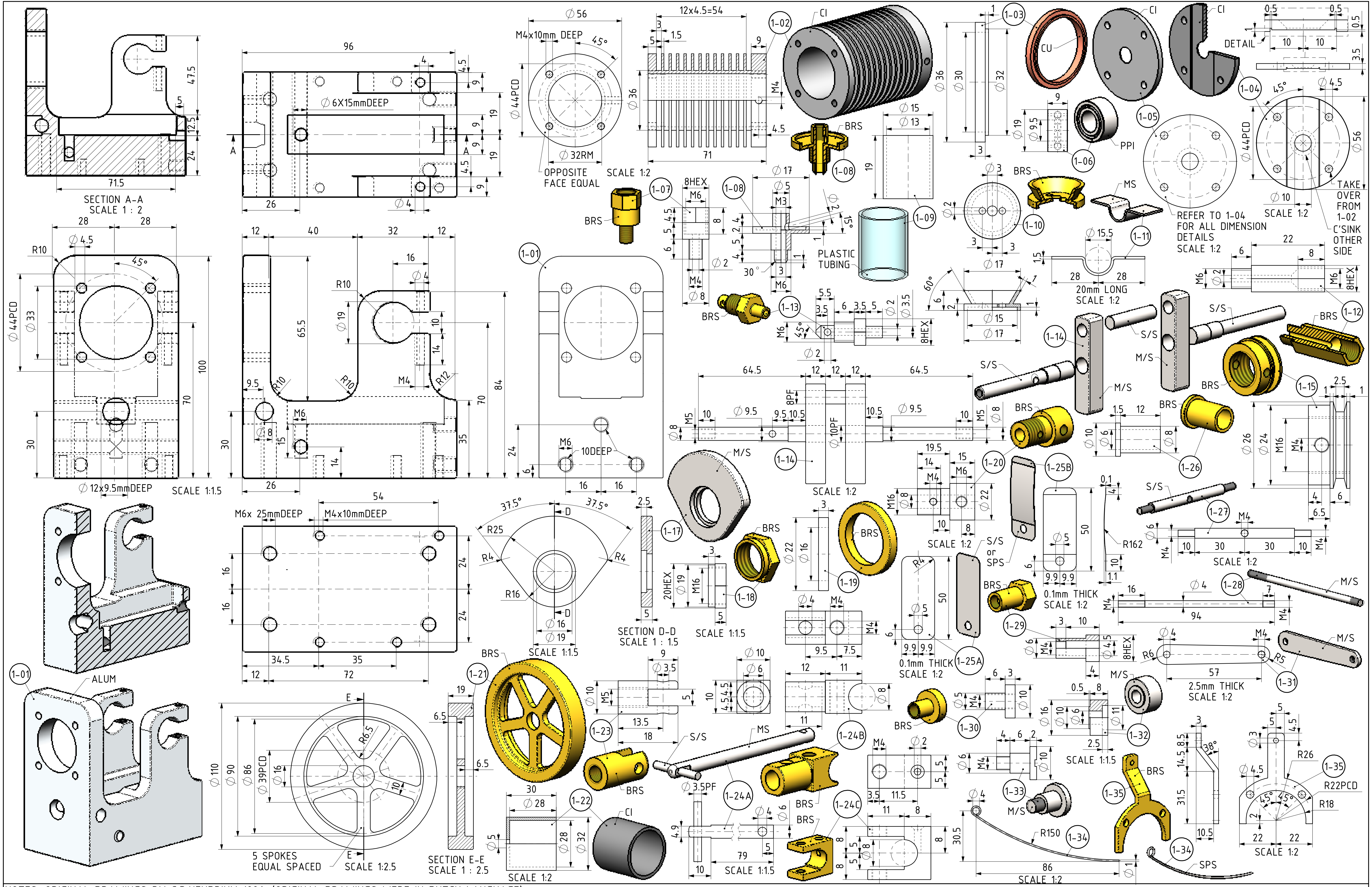

NOTES: ORIGINAL DRAWINGS BY C.P.HENDRIKX 1996. (ORIGINAL DRAWINGS WERE IN DUTCH LANGUAGE)

TITLE LANZ MINI TRACTOR	DRAWING CONTENTS PARTS AND ASSEMBLIES	PROJECT No 05-02-11 JDW DRAUGHTING SERVICES J.A.M. DE WAAL. 12 BRIGHTWELL STREET PAPAKURA 2110. NEW ZEALAND. PHONE: 0064 09 2988815. MOB: 0211791000 E-MAIL: dewaal@xtra.co.nz.	PROJECTION JDWDS DATE MAY-2014 SHEET:03 OF 13	MODEL SCALE: 1:1 DWG SCALE: 1:1 @A3 OR AS SHOWN Copyright © J.A.M. DE WAAL PAPAKURA NZ A3 No: LANZ-03